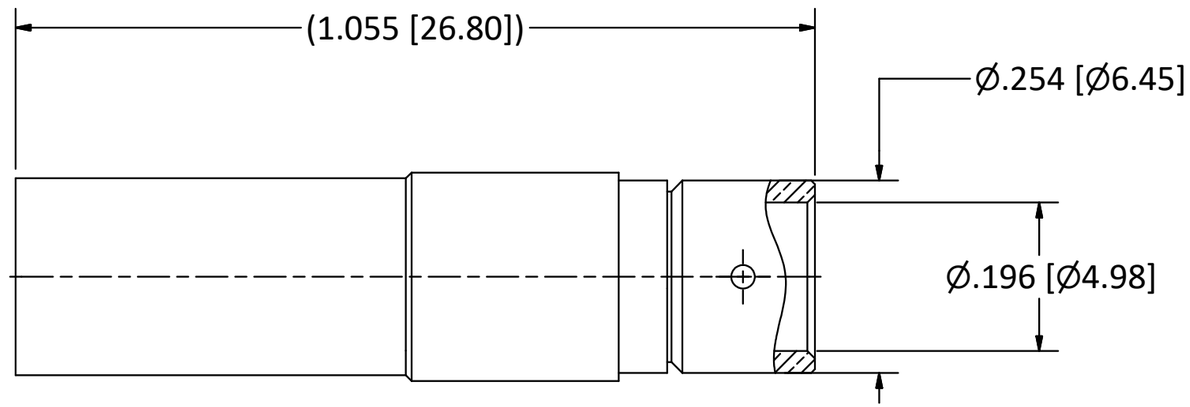

NOTES:
1. SPECIFICATIONS PER IDS-65.
2. ACCOMMODATES HARBOUR LL235, CARLISLE 311501 GIGAFLIGHT GF5-71T & GF5-71T-1 OR EQUIVALENT FLEXIBLE CABLE.
3. DESIGNED TO MATE WITH 65 SERIES SIZE 5 PkZ PLUG ONLY.
4. ELECTRICAL PROPERTIES:
   a) FREQUENCY: DC TO 18 GHz.
   b) VSWR: 1.50 : 1 MAX.
5. HOUSING: ARINC 404/600 PLUG CONNECTOR SHELL CONTAINING SIZE 5 CAVITY (REF: MIL-DTL-83527B).
6. **DOES NOT MATE WITH OTHER INDUSTRY-STANDARD SIZE 5 CONTACTS.**

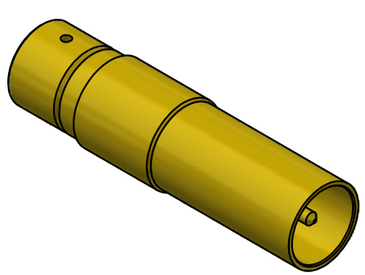

SCALE 2.5 : 1

REV.	DESCRIPTION	BY	DATE
A	REL. PER ECN 14506	SPS	6/9/2025
01	PRELIMINARY	SPS	9/24/2024

This drawing embodies a proprietary design of The Phoenix Company of Chicago, Inc., Naugatuck, CT 06770. All design, manufacturing, reproduction, use, sale, and other rights regarding the same are expressly reserved. The information in this drawing may be covered completely or in part by patents and/or patents pending.

WARNING - THIS DOCUMENT CONTAINS TECHNICAL DATA WHOSE EXPORT IS RESTRICTED BY THE ARMS EXPORT CONTROL ACT (TITLE 22, U.S.C., SEC 2751, ET. SEQ.) OR THE EXPORT ADMINISTRATION ACT OF 1979, AS AMENDED, TITLE 50, U.S.C., APP 2401 ET SEQ. VIOLATIONS OF THESE EXPORT LAWS ARE SUBJECT TO SEVERE CRIMINAL PENALTIES. DISSEMINATE IN ACCORDANCE WITH PROVISIONS OF DOD DIRECTIVE 5230.25.

UNLESS OTHERWISE SPECIFIED, PHOENIX WORKMANSHIP STANDARDS APPLY
DIMENSIONS IN INCHES OR [METRIC]

DO NOT SCALE PRINTS

TOLERANCES ARE:
FRACTIONS: ± 1/64
DECIMALS: .XX ± .01
.XXX ± .003
ANGLES: ± 1/2˚

32√

APPROVALS	DATE
DRAWN SPS	9/24/2024
CHECKED SJG	9/24/2024
QA	
MFG	
ENGINEER SPS	9/24/2024
APPROVED SJG	9/24/2024

The PHOENIX Company of Chicago, Inc.
22 GREAT HILL RD., NAUGATUCK, CT 06770
WWW.PHOENIXOFCHICAGO.COM
PHONE: (800) 323-9562 FAX:(630) 206-1801

TITLE
ARINC 404/600 SIZE 5 PkZ® RECEPTACLE, DIRECT SOLDER TERMINATION

SIZE	FSCM	DWG NO	REV	PLATING OPT.
B	58167	**65-1020-1910**	A	A, B, C, D
SCALE 5 : 1		F.S.R. #	SHEET 1 OF 1	