INTERFACE DESIGN STANDARD	
IDS-65	
SHEET 1 OF 3	DATE: 3/31/2025
DRAWN: BAK	APPROVED: SPS

The PHOENIX Company of Chicago, Inc.
22 GREAT HILL RD., NAUGATUCK, CT 06770
WWW.PHOENIXOFCHICAGO.COM

PHONE: (800) 323-9562 FAX: (630) 206-1801

REV.	DESCRIPTION	DATE	APPR.
A	REL. PER ECN 14505	3/31/2025	SPS

Description: 65 Series, Size 5 PkZ® for ARINC 404/600 Connector Housings

MATERIALS

BODIES

Plug: Brass Per ASTM B16
Receptacle: Brass Per ASTM B16

CONTACTS

Center Contact: Beryllium Copper Per ASTM B196
Outer Contact: Beryllium Copper Per ASTM B196

INSULATORS

Virgin Teflon (PTFE) Per ASTM D1710

PLATING

Gold Per MIL-DTL-45204 (Electro Deposited)
Copper Per SAE AMS 2418 (Electro Deposited)
Nickel Per QQ-N-290

FINISH (Ending Letter of Part Number)

A: .000050" Min. Gold Over Nickel

B: .000030" Min. Gold Over Nickel

C: .000050" Min. Gold Over Copper

D: .000030" Min. Gold Over Copper

Other Metal Parts: Plated to Meet The Environmental Requirements

MATING CHARACTERISTICS

Bodies:	48 oz. (3.0 lbs.) Max. Insertion 2 oz. (0.125 lbs.) Min. Withdrawal
Contacts:	32 oz. (2.0 lbs.) Max. Insertion .5 oz. (0.031 lbs.) Min. Withdrawal
Axial Mating:	.110"
Housing Retention:	192 oz. (12 lbs.) Min.

ELECTRICAL

Frequency Range:	DC To 18 GHz
Voltage Rating Straight:	1000 VRMS
Voltage Rating Angled:	800 VRMS
Insulation Resistance:	2000 Megohms Min.
Insertion Loss:	$.06\sqrt{f(GHz)}$ dB
Impedance:	50 Ohms
Contact Resistance:	Center Contact 5 Milliohms
Contact Resistance:	Outer Contact 3 Milliohms
VSWR:	Configuration Dependent
RF Leakage:	-90 dB Min. @ 2-3 GHz

ENVIRONMENTAL

Operating Temperature:	-55°C To +200°C
Insulation Resistance:	2000 Megohms Post Humidity
Vibration:	MIL-STD-202, Method 204, Test Condition D
Shock:	MIL-STD-202, Method 213, Test Condition I
Thermal Shock:	MIL-STD-202, Method 107, Test Condition B, Except High Temperature Shall Be +85°C
Durability:	500 Cycles
Moisture Resistance:	MIL-STD-202, Method 106
Salt Spray:	MIL-STD-1344, Method 1001, Condition B

WARNING - THIS DOCUMENT CONTAINS TECHNICAL DATA WHOSE EXPORT IS RESTRICTED BY THE ARMS EXPORT CONTROL ACT (TITLE 22, U.S.C., SEC 2751, ET. SEQ.) OR THE EXPORT ADMINISTRATION ACT OF 1979, AS AMENDED, TITLE 50, U.S.C., APP 2401 ET SEQ. VIOLATIONS OF THESE EXPORT LAWS ARE SUBJECT TO SEVERE CRIMINAL PENALTIES. DISSEMINATE IN ACCORDANCE WITH PROVISIONS OF DOD DIRECTIVE 5230.25.

The PHOENIX Company of Chicago, Inc.
22 GREAT HILL RD., NAUGATUCK, CT 06770
WWW.PHOENIXOFCHICAGO.COM

PHONE: (800) 323-9562 FAX: (630) 206-1801

CONTACTS:

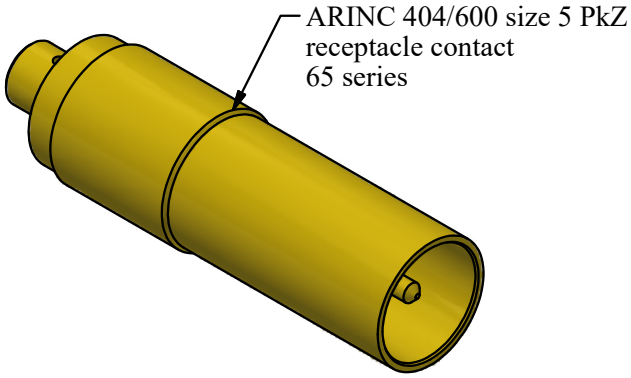

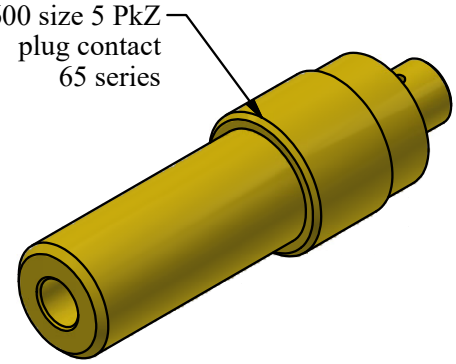

CONTACTS IN CONNECTOR HOUSINGS:

Insertion Tool: -

Extraction Tool: M81969/28-01 or DRK310

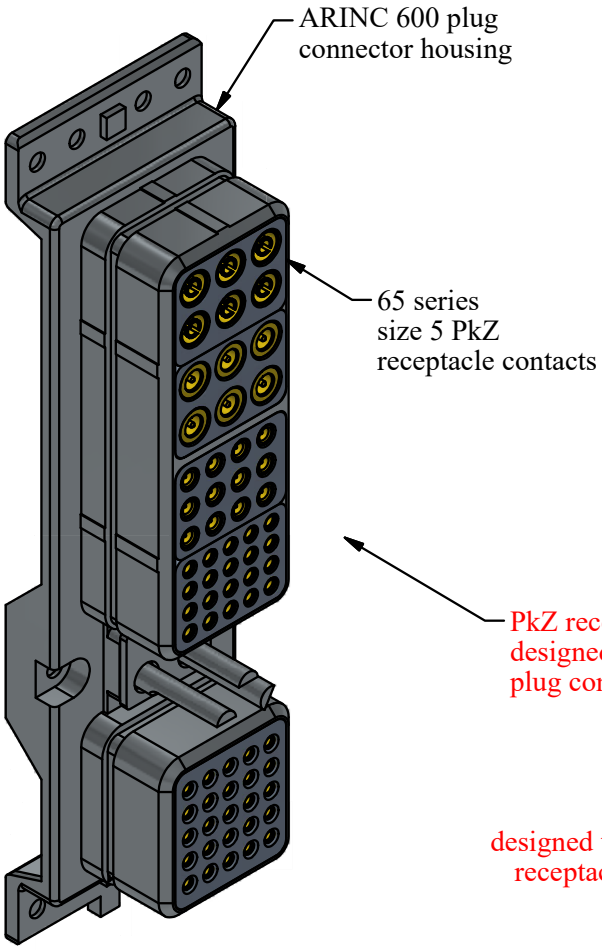

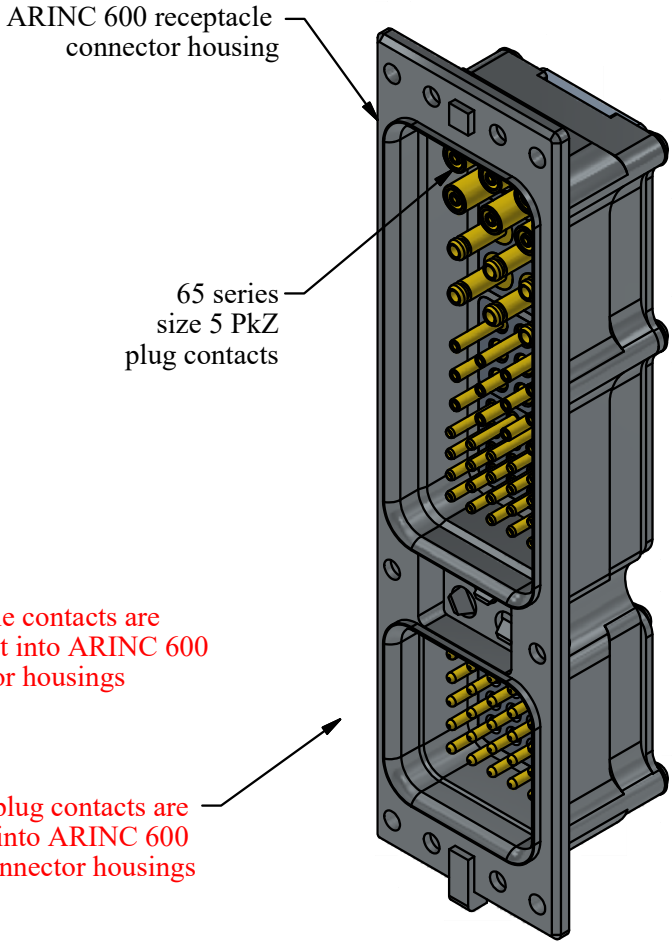

PkZ receptacle contacts are designed to fit into ARINC 600 plug connector housings

PkZ plug contacts are designed to fit into ARINC 600 receptacle connector housings

WARNING - THIS DOCUMENT CONTAINS TECHNICAL DATA WHOSE EXPORT IS RESTRICTED BY THE ARMS EXPORT CONTROL ACT (TITLE 22, U.S.C., SEC 2751, ET. SEQ.) OR THE EXPORT ADMINISTRATION ACT OF 1979, AS AMENDED, TITLE 50, U.S.C., APP 2401 ET SEQ. VIOLATIONS OF THESE EXPORT LAWS ARE SUBJECT TO SEVERE CRIMINAL PENALTIES. DISSEMINATE IN ACCORDANCE WITH PROVISIONS OF DOD DIRECTIVE 5230.25.

The PHOENIX Company of Chicago, Inc.
22 GREAT HILL RD., NAUGATUCK, CT 06770
WWW.PHOENIXOFCHICAGO.COM

PHONE: (800) 323-9562 FAX: (630) 206-1801

CONTACT MATING IN CONNECTOR HOUSINGS:

HANDLE WITH CARE

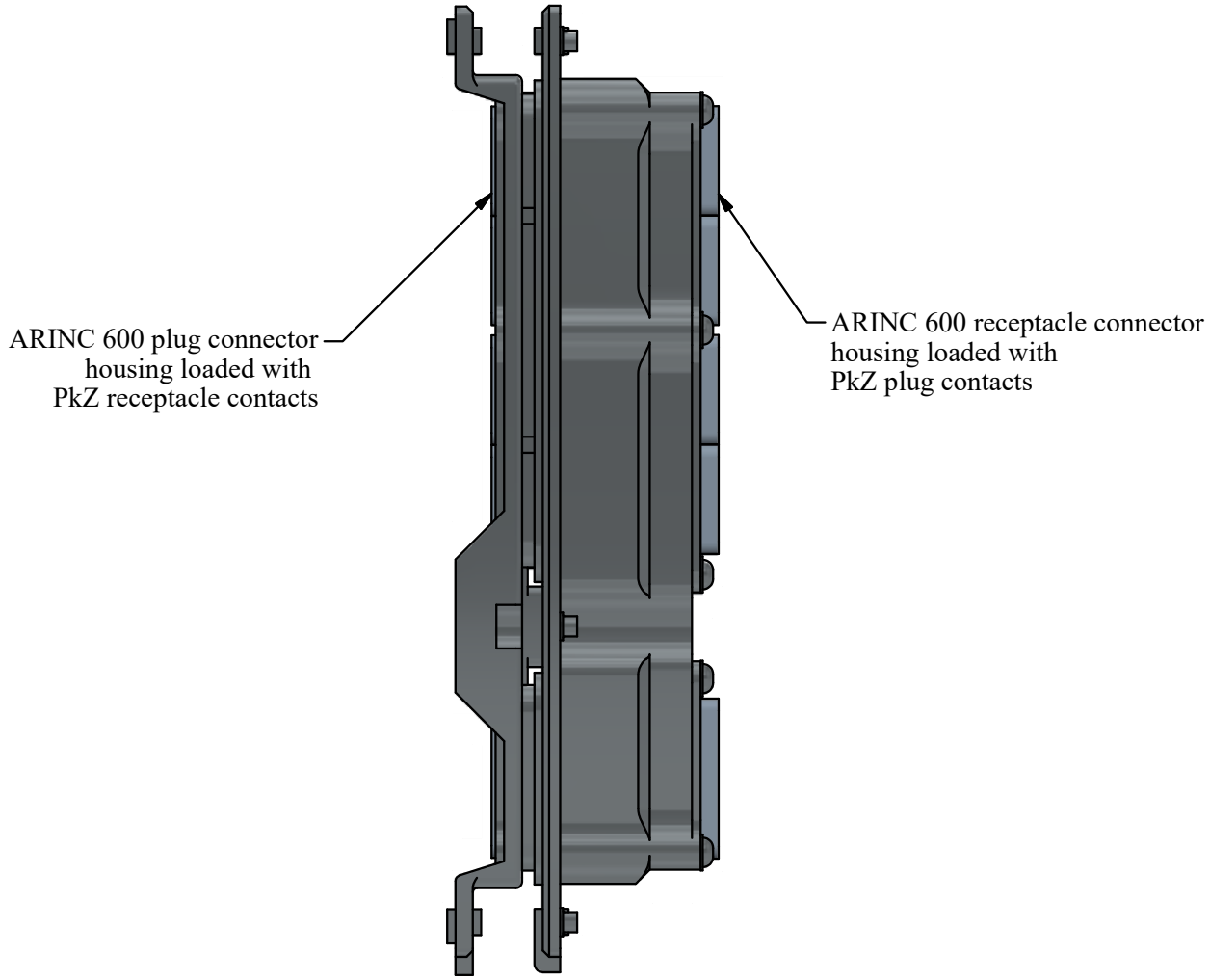

CAUTION

- Precision contacts with small diameters are used in these connectors to achieve superior electrical and mechanical performance.
- Care is required when mating these connectors to protect the contacts from damage and achieve optimal performance.
- Stabilizing rings for PkZ plug contacts can be used to aid in the mating of the connectors.

WARNING - THIS DOCUMENT CONTAINS TECHNICAL DATA WHOSE EXPORT IS RESTRICTED BY THE ARMS EXPORT CONTROL ACT (TITLE 22, U.S.C., SEC 2751, ET. SEQ.) OR THE EXPORT ADMINISTRATION ACT OF 1979, AS AMENDED, TITLE 50, U.S.C., APP 2401 ET SEQ. VIOLATIONS OF THESE EXPORT LAWS ARE SUBJECT TO SEVERE CRIMINAL PENALTIES. DISSEMINATE IN ACCORDANCE WITH PROVISIONS OF DOD DIRECTIVE 5230.25.