SPECIFICATIONS:
1. PART NUMBER: PX16QPD64BC394A AND DATE CODE.
2. MATERIALS:
   a) HOUSING & GUIDE PLATE: ACETAL, COLOR: BLACK.
   b) HARDWARE (JACKSCREWS, JACKSCREW HEADS, SCREWS,
   c) SPRING PINS, INSERTS AND WASHERS): STAINLESS STEEL.
   d) GUIDE PINS: BERYLLIUM COPPER.
3. HARDWARE FINISHES: PASSIVATED.
   GUIDE PINS: GOLD PLATED.
4. ELECTRICAL PROPERTIES:
   a) DIELECTRIC STRENGTH: 1,000 VOLTS RMS AT SEA LEVEL;
   b) 325 VOLTS RMS AT 70,000 FEET.
   c) INSULATION RESISTANCE: 1 MEGOHM MINIMUM.
5. MECHANICAL PROPERTIES:
   OPERATING TEMPERATURE: -40° F TO +194° F (-40° C TO +90° C).
6. CABLE ASSY SPECIFICATIONS:
   a) IMPEDANCE 50 OHMS.
   b) HI-POT & CONTINUITY TEST 100%.
   c) PkZ SPECIFICATIONS PER IDS-156.
   d) FREQUENCY: DC TO 3 GHz

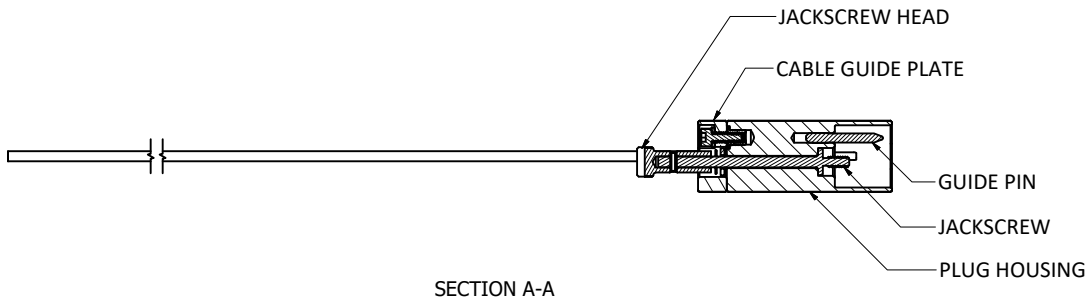

SECTION A-A

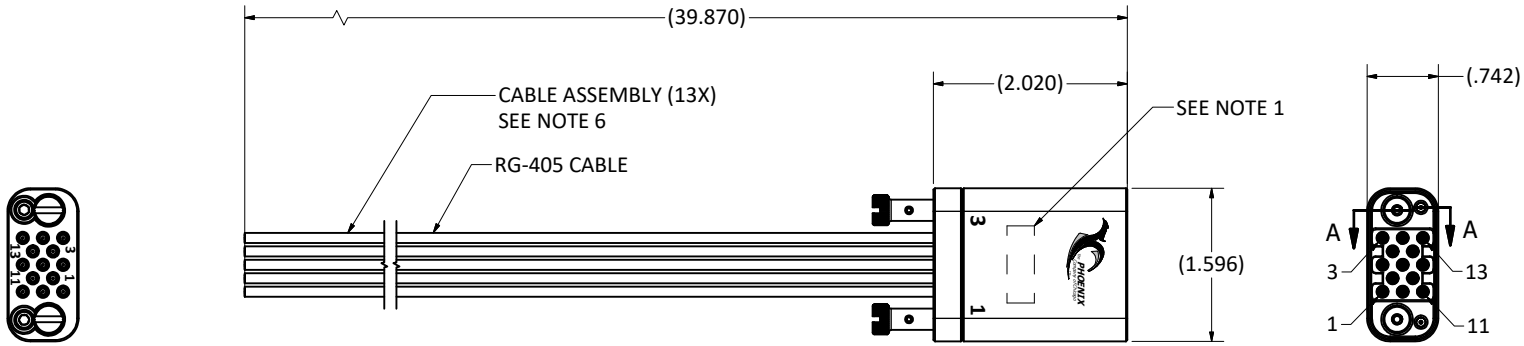

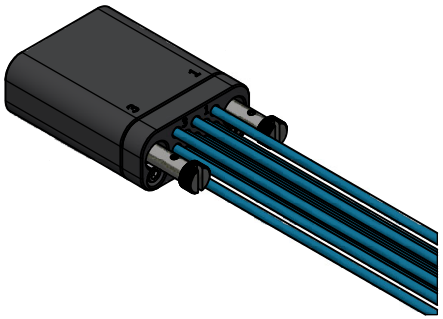

MATERIAL:

REV.	DESCRIPTION	DATE	APPROVAL
A	RELEASED PER ECN 14494	3/5/2025	DW

WARNING - THIS DOCUMENT CONTAINS TECHNICAL DATA WHOSE EXPORT IS RESTRICTED BY THE ARMS EXPORT CONTROL ACT (TITLE 22, U.S.C., SEC 2751, ET. SEQ.) OR THE EXPORT ADMINISTRATION ACT OF 1979, AS AMENDED, TITLE 50, U.S.C., APP 2401 ET SEQ. VIOLATIONS OF THESE EXPORT LAWS ARE SUBJECT TO SEVERE CRIMINAL PENALTIES. DISSEMINATE IN ACCORDANCE WITH PROVISIONS OF DOD DIRECTIVE 5230.25.

This drawing embodies a proprietary design of The Phoenix Company of Chicago, Inc., Naugatuck, CT 06770. All design, manufacturing, reproduction, use, sale, and other rights regarding the same are expressly reserved. The information in this drawing may be covered completely or in part by patents and/or patents pending.

UNLESS OTHERWISE SPECIFIED, PALCO WORKMANSHIP STANDARDS APPLY DIMENSIONS IN INCHES OR [METRIC]

DO NOT SCALE PRINTS

TOLERANCES ARE:
FRACTIONS: ± 1/64
DECIMALS: .XX ± .01
.XXX ± .003
ANGLES: ± 1/2°

32 √

APPROVALS	DATE
DRAWN BP	1/31/2025
CHECKED AH	2/5/2025
QA	
MFG	
ENGINEER BP	2/5/2025
APPROVED DW	3/5/2025

The PHOENIX Company of Chicago, Inc.
22 GREAT HILL RD., NAUGATUCK, CT 06770
WWW.PHOENIXOFCHICAGO.COM
PHONE: (800) 323-9562 FAX:(630) 206-1801

TITLE

PX PLUG HARNESS; 13 POS, SIZE 16
PkZ® TO BLUNT CUT ON RG-405 CABLE

SIZE	FSCM	DWG NO	REV	PLATING OPT.
C	58167	PX16QPD64BC394A	A	

SCALE 1 : 1 | F.S.R. # | SHEET 1 OF 1