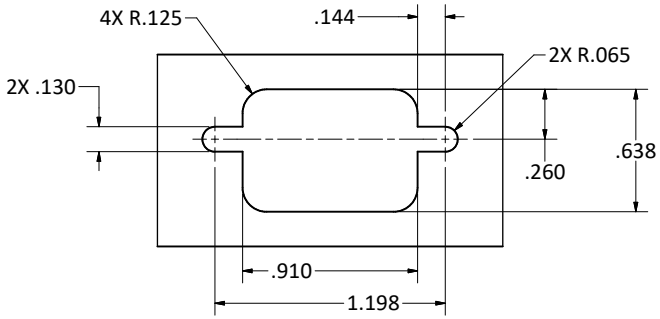

RECOMMENDED PANEL MOUNTING CUT OUT (MAX. THICKNESS .125)

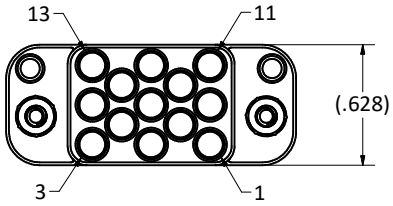

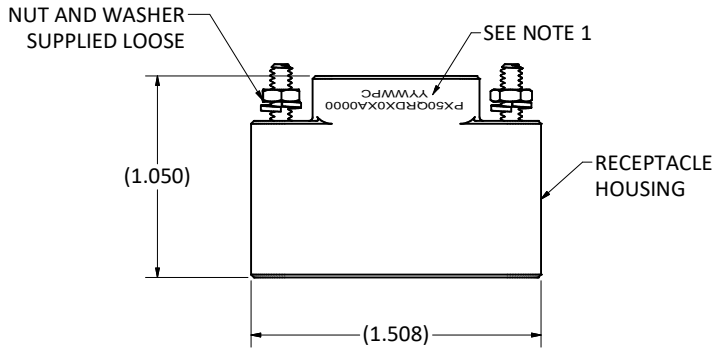

SPECIFICATIONS:

1. PART NUMBER PX50QRDX0XA0000 AND DATE CODE FORMAT YYWWPC WITH PHOENIX DESIGNATOR.
2. MATERIALS:
   a) HOUSING: ACETAL, COLOR: BLACK
   b) HOUSING HARDWARE: STAINLESS STEEL
   c) GUIDE PINS: STAINLESS STEEL
3. HARDWARE FINISHES: PASSIVATED
   GUIDE PINS: PASSIVATED
4. ELECTRICAL PROPERTIES:
   a) DIELECTRIC STRENGTH: 1,000 VOLTS RMS AT SEA LEVEL; 325 VOLTS RMS AT 70,000 FEET
   b) INSULATION RESISTANCE: 1 MEGOHM MINIMUM
5. ENVIRONMENTAL PROPERTIES:
   OPERATING TEMPERATURE: -40° F TO +194° F (-40° C TO +90° C)

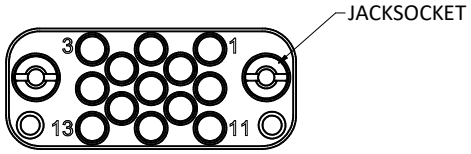



SCALE 1:1

REV.	DESCRIPTION	DATE	APPROVAL
A	RELEASED PER ECN 14663		

WARNING - THIS DOCUMENT CONTAINS TECHNICAL DATA WHOSE EXPORT IS RESTRICTED BY THE ARMS EXPORT CONTROL ACT (TITLE 22, U.S.C., SEC 2751, ET. SEQ.) OR THE EXPORT ADMINISTRATION ACT OF 1979, AS AMENDED, TITLE 50, U.S.C., APP 2401 ET SEQ. VIOLATIONS OF THESE EXPORT LAWS ARE SUBJECT TO SEVERE CRIMINAL PENALTIES. DISSEMINATE IN ACCORDANCE WITH PROVISIONS OF DOD DIRECTIVE 5230.25.

This drawing embodies a proprietary design of The Phoenix Company of Chicago, Inc., Naugatuck, CT 06770. All design, manufacturing, reproduction, use, sale, and other rights regarding the same are expressly reserved. The information in this drawing may be covered completely or in part by patents and/or patents pending.

UNLESS OTHERWISE SPECIFIED, PALCO WORKMANSHIP STANDARDS APPLY
DIMENSIONS IN INCHES OR [METRIC]
DO NOT SCALE PRINTS
TOLERANCES ARE:
FRACTIONS: ± 1/64
DECIMALS: .XX ± .01
.XXX ± .003
ANGLES: ± 1/2°

APPROVALS	DATE
DRAWN DRW	11/10/2026
CHECKED	
QA	
MFG	
ENGINEER	
APPROVED	

The PHOENIX Company of Chicago, Inc.
22 GREAT HILL RD., NAUGATUCK, CT 06770
WWW.PHOENIXOFCHICAGO.COM
PHONE: (800) 323-9562 FAX:(630) 206-1801

TITLE
PX50 RECEPTACLE PANEL MOUNT HOUSING ASSEMBLY, 13 POSITIONS, SIZE 12

SIZE	FSCM	DWG NO	REV	PLATING OPT.
C	58167	**PX50QRDX0XA0000**	A	

SCALE 2 : 1 | F.S.R. # | SHEET 1 OF 1